PRELIMINARY SPEC

Part Number: AA2810RWS/Z WHITE

ATTENTION
OBSERVE PRECAUTIONS
FOR HANDLING
ELECTROSTATIC
DISCHARGE
SENSITIVE
DEVICES

Features

- 2.8mmX1.0mm RIGHT ANGLE SMT LED, 1.2mm THICKNESS.
- LOW POWER CONSUMPTION.
- IDEAL FOR BACKLIGHT AND INDICATOR.
- VARIOUS COLORS AND LENS TYPES AVAILABLE.
- PACKAGE : 2000PCS / REEL.

ELECTROSTATIC DISCHARGE THRESHOLD (HBM):1000V.

- TYP. COLOR TEMPERATURE:6500K
- COLOR COORDINATES:X=0.31,Y=0.31 ACC. TO CIE1931(WHITE).
- OPTICAL EFFICIENCY:53.1 lm/W(TYP.)
- COLOR REPRODUCTION INDEX:80
- MOISTURE SENSITIVITY LEVEL : LEVEL 4.
- RoHS COMPLIANT.

Description

The source color devices are made with InGaN Light Emitting Diode.

Static electricity and surge damage the LEDS.

It is recommended to use a wrist band or anti-electrostatic glove when handling the LEDs.

All devices, equipment and machinery must be electrically grounded.

Applications

- traffic signaling.
- backlighting (illuminated advertising , general lighting).
- interior and exterior automotive lighting.
- substitution of micro incandescent lamps.
- Reading camps.
- signal and symbol luminaire for orientation.
- marker lights (e.g. steps, exit ways, etc).
- decorative and entertainment lighting.
- indoor and outdoor commercial and residential architectural lighting.

Package Dimensions

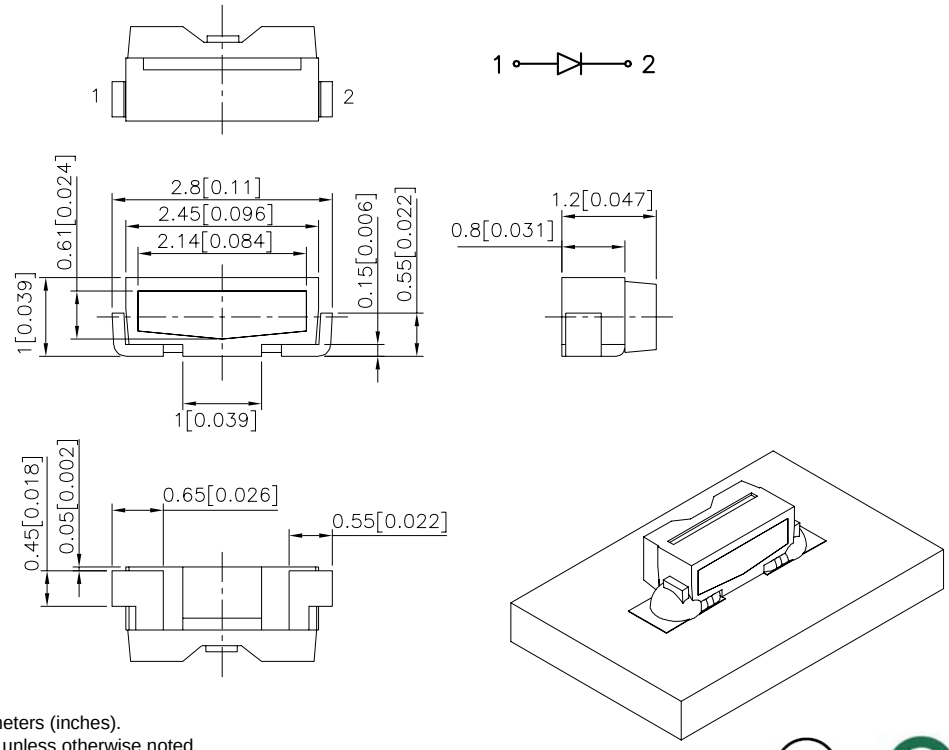

Notes:
1. All dimensions are in millimeters (inches).
2. Tolerance is ±0.1(0.0039") unless otherwise noted.
3. Specifications are subject to change without notice.
4. The device has a single mounting surface. The device must be mounted according to the specifications.

Handling Precautions

Compare to epoxy encapsulant that is hard and brittle, silicone is softer and flexible. Although its characteristic significantly reduces thermal stress, it is more susceptible to damage by external mechanical force.
As a result, special handling precautions need to be observed during assembly using silicone encapsulated LED products. Failure to comply might leads to damage and premature failure of the LED.

Do not directly touch or handle the silicone lens surface. It may damage the internal circuitry.

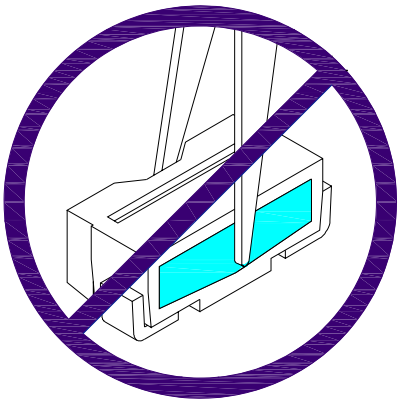

Selection Guide

Part No.	Dice	Lens Type	luminous Intensity Note2 Iv(mcd) @ 20 mA		Φv (mlm) Note3 @ 20 mA		Viewing Angle Note1
			Min.	Typ.	Min.	Typ.	2θ1/2
AA2810RWS/Z	WHITE (InGaN)	WATER CLEAR	650	1200	1500	3400	120°

Absolute Maximum Ratings at T_A=25°C

Parameter	Symbol	Value	Unit
Power dissipation	P_t	111	mW
Reverse Voltage	V_R	5	V
Junction temperature	T_J	110	°C
Operating Temperature	Top	-40 To +85	°C
Storage Temperature	Tstg	-40 To +100	°C
DC Forward Current	I_F	30	mA
Peak Forward Current Note4	I_{FM}	100	mA
Thermal resistance Junction/ambient Note5 Junction/solder point	 $R_{th\ JA}$ $R_{th\ JS}$	 300 140	 °C/W °C/W

Notes:
1.θ1/2 is the angle from optical centerline where the luminous intensity is 1/2 the optical centerline value.
2.Luminous intensity is measured by a current pulse of 10ms at a tolerance of ±15%.
3.The typical data of Luminous Flux can only reflect statistical figures, actual parameters of individual product could differ from the typical data. For the purpose of product enhancement, the typical data is subject to change without prior notice.
4.1/10 Duty Cycle, 0.1ms Pulse Width.
5.Rth(J-A) Results from mounting on PC board FR4 (pad size≥16 mm^2 per pad),

Electrical / Optical Characteristics at T_A=25°C

Parameter	Symbol	Value	Unit
Chromaticity coordinate x acc.to CIE1931 I_F=20mA [Typ.]	X Note1	0.31	-
Chromaticity coordinate y acc.to CIE1931 I_F=20mA [Typ.]	Y Note1	0.31	-
Forward Voltage I_F=20mA [Min.]	V_F Note2	2.7	V
Forward Voltage I_F=20mA [Typ.]		3.2	
Forward Voltage I_F=20mA [Max.]		3.7	
Reverse Current (V_R=5V) [Typ.]	I_R	0.01	μA
Reverse Current (V_R=5V) [Max.]		10	
Temperature coefficient of x I_F=20mA, -10°C≤ T≤100°C [Typ.]	TC x	-0.1	10^{-3}/°C
Temperature coefficient of y I_F=20mA, -10°C≤ T≤100°C [Typ.]	TCy	-0.2	10^{-3}/°C
Temperature coefficient of V_F I_F=20mA, -10°C≤ T≤100°C [Typ.]	TC_V	-2.5	mV/°C

Notes:
1.Chromaticity coordinates are measured by a current pulse of 20ms with a tolerance of ±0.01 in X and Y color coordinates.
2.Forward voltage is measured with a current pulse of 10ms at a tolerance of ±0.1V.

Brightness codes

luminous Intensity Note1 Iv(mcd) @ 20 mA			Φv (mlm) Note2 @ 20 mA
Code.	**Min.**	**Max.**	Typ.
T	650	1200	3300
U	900	1500	3450
V	1200	1800	3600

Notes:
1.Luminous intensity is measured by a current pulse of 10ms at a tolerance of ±15%.
2.The typical data of Luminous Flux can only reflect statistical figures, actual parameters of individual product could differ from the typical data. For the purpose of product enhancement, the typical data is subject to change without prior notice.

White **AA2810RWS/Z**

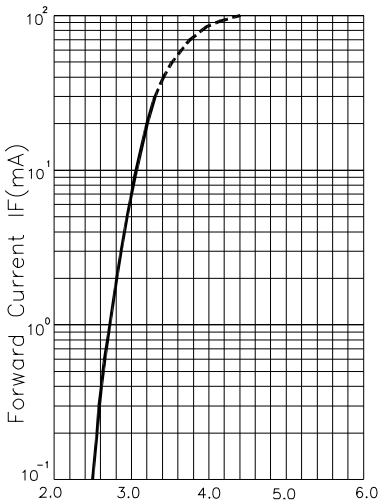

FORWARD CURRENT Vs.
FORWARD VOLTAGE

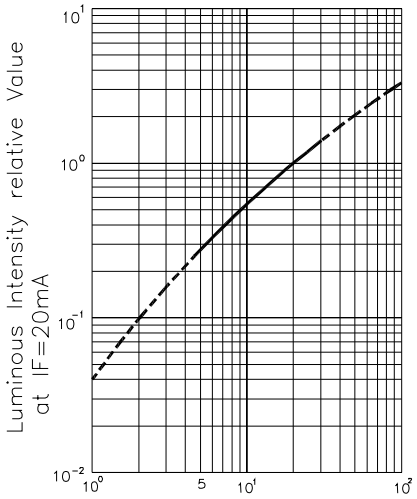

LUMINOUS INTENSITY Vs.
FORWARD CURRENT

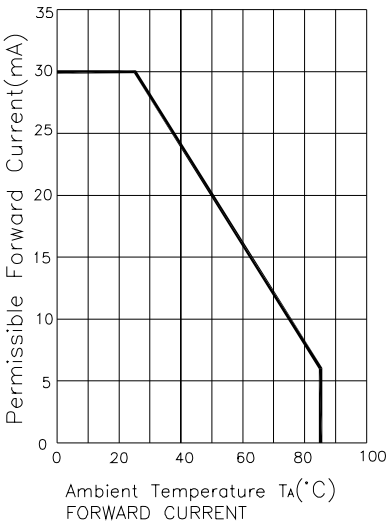

FORWARD CURRENT
DERATING CURVE

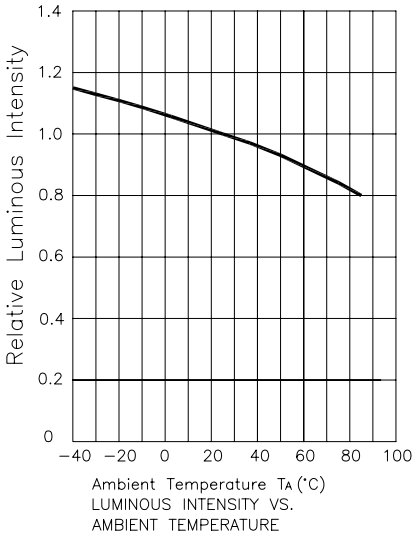

LUMINOUS INTENSITY VS.
AMBIENT TEMPERATURE

AA2810RWS/Z

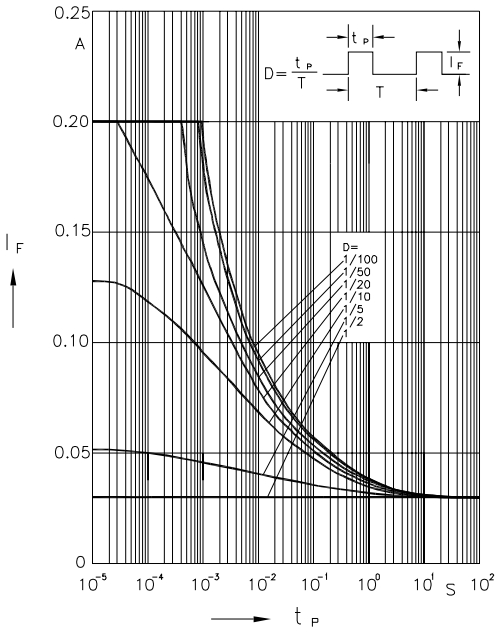

Permissible Pulse Handling Capability
Duty cycle D=parameter,TA=25°C

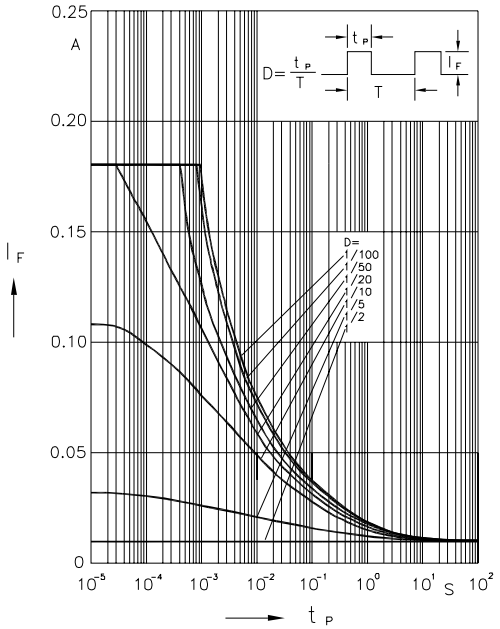

Permissible Pulse Handling Capability
Duty cycle D=parameter,TA=85°C

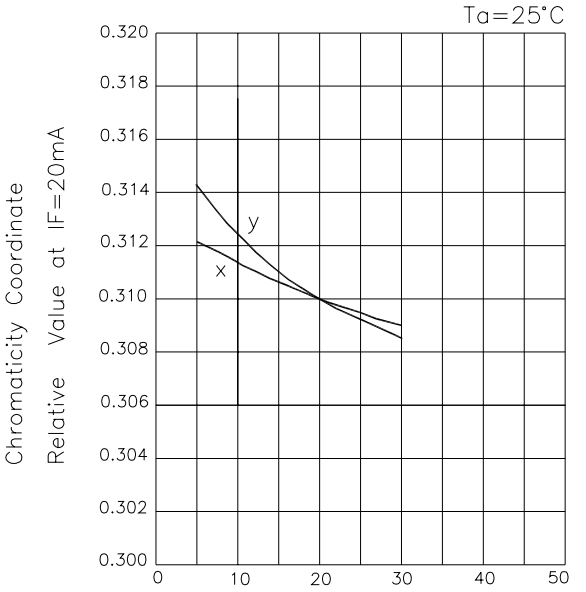

Chromaticity Coordinate Shift Vs.
Forward Current

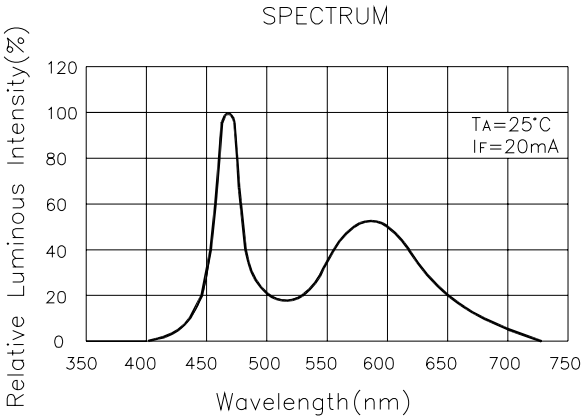

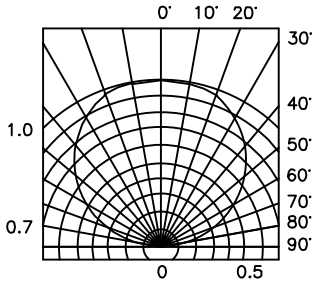

SPATIAL DISTRIBUTION

AA2810RWS/Z

White CIE

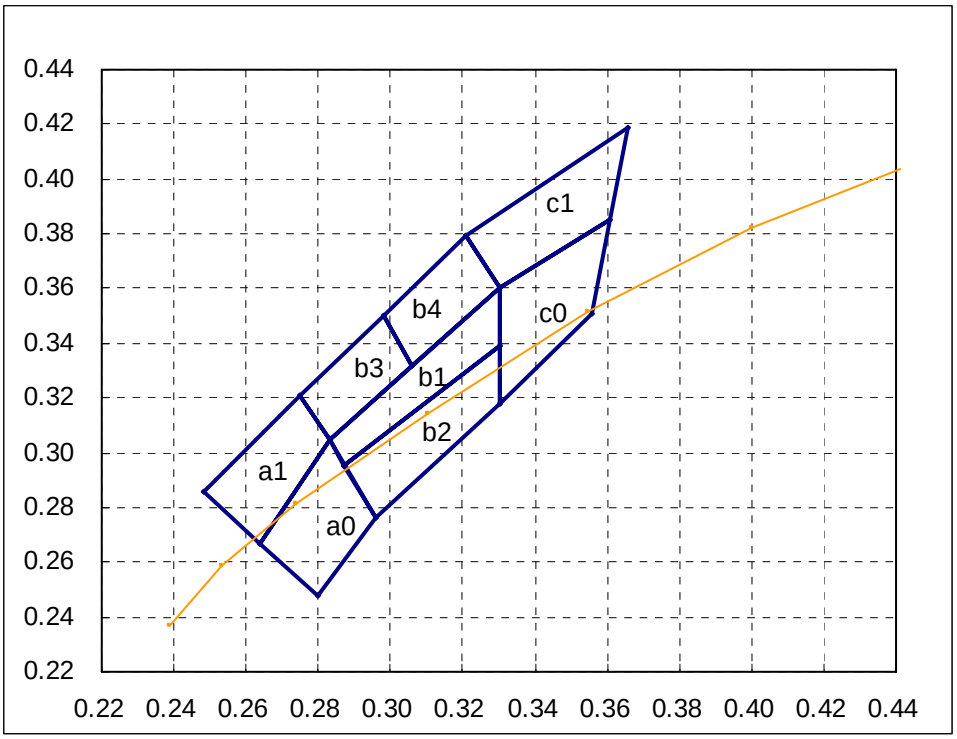

a0						a1				
X	0.264	0.283	0.296	0.280		X	0.248	0.275	0.283	0.264
Y	0.267	0.305	0.276	0.248		Y	0.286	0.321	0.305	0.267
Reference CCT: 14000~9000k						Reference CCT: 14000~9000k				
b1						b2				
X	0.283	0.330	0.330	0.287		X	0.287	0.330	0.330	0.296
Y	0.305	0.360	0.339	0.295		Y	0.295	0.339	0.318	0.276
Reference CCT: 9000~5600k						Reference CCT: 9000~5600k				
b3						b4				
X	0.275	0.298	0.306	0.283		X	0.298	0.321	0.330	0.306
Y	0.321	0.350	0.332	0.305		Y	0.350	0.379	0.360	0.332
Reference CCT: 9000~7000k						Reference CCT: 7600~5600k				
c0						c1				
X	0.330	0.361	0.356	0.330		X	0.321	0.366	0.361	0.330
Y	0.360	0.385	0.351	0.318		Y	0.379	0.419	0.385	0.360
Reference CCT: 5600~4600k						Reference CCT: 6000~4600k				

AA2810RWS/Z

Reflow Soldering Profile For Lead-free SMT Process.

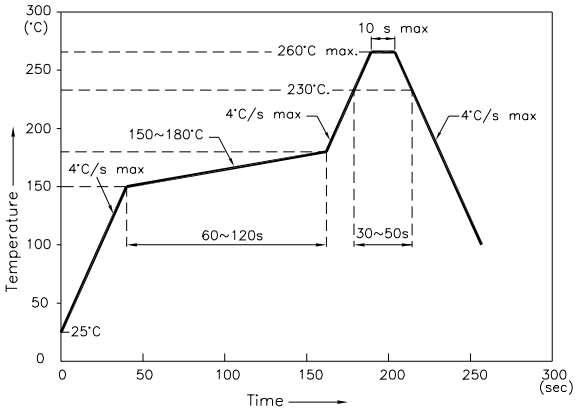

NOTES:

1. We recommend the reflow temperature 245°C(+/-5°C).The maximum soldering temperature should be limited to 260°C.
2. Don't cause stress to the epoxy resin while it is exposed to high temperature.
3. Number of reflow process shall be 2 times or less.

Recommended Soldering Pattern
(Units : mm; Tolerance: ±0.1)

Pad design for improved heat dissipation

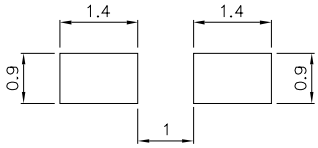

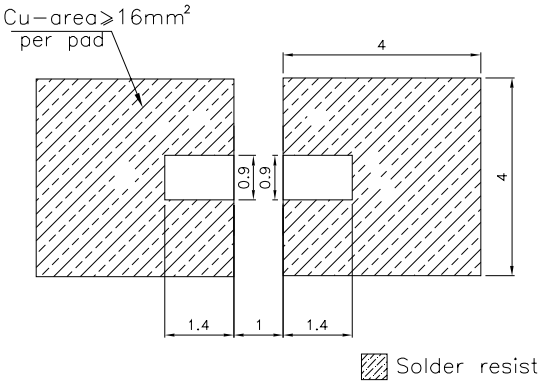

Tape Specifications
(Units : mm)

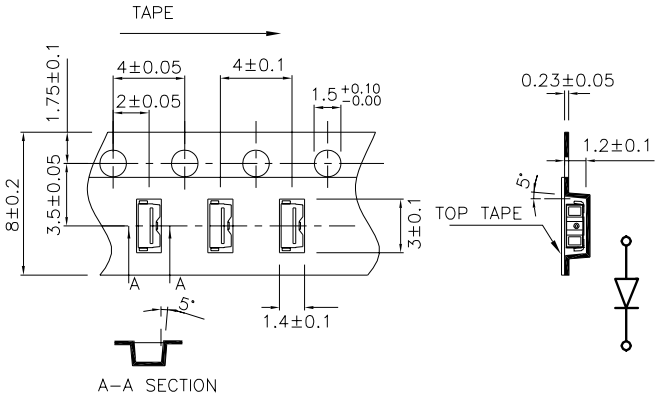

Reel Dimension

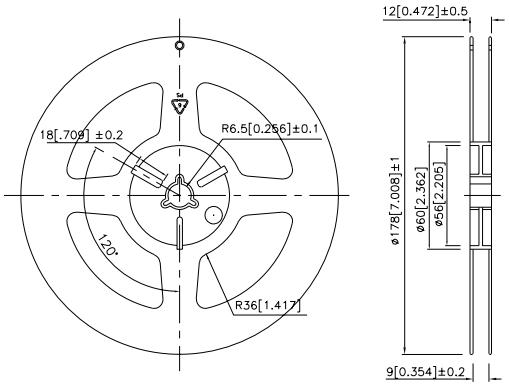

PACKING & LABEL SPECIFICATIONS **AA2810RWS/Z**